Combined Layout

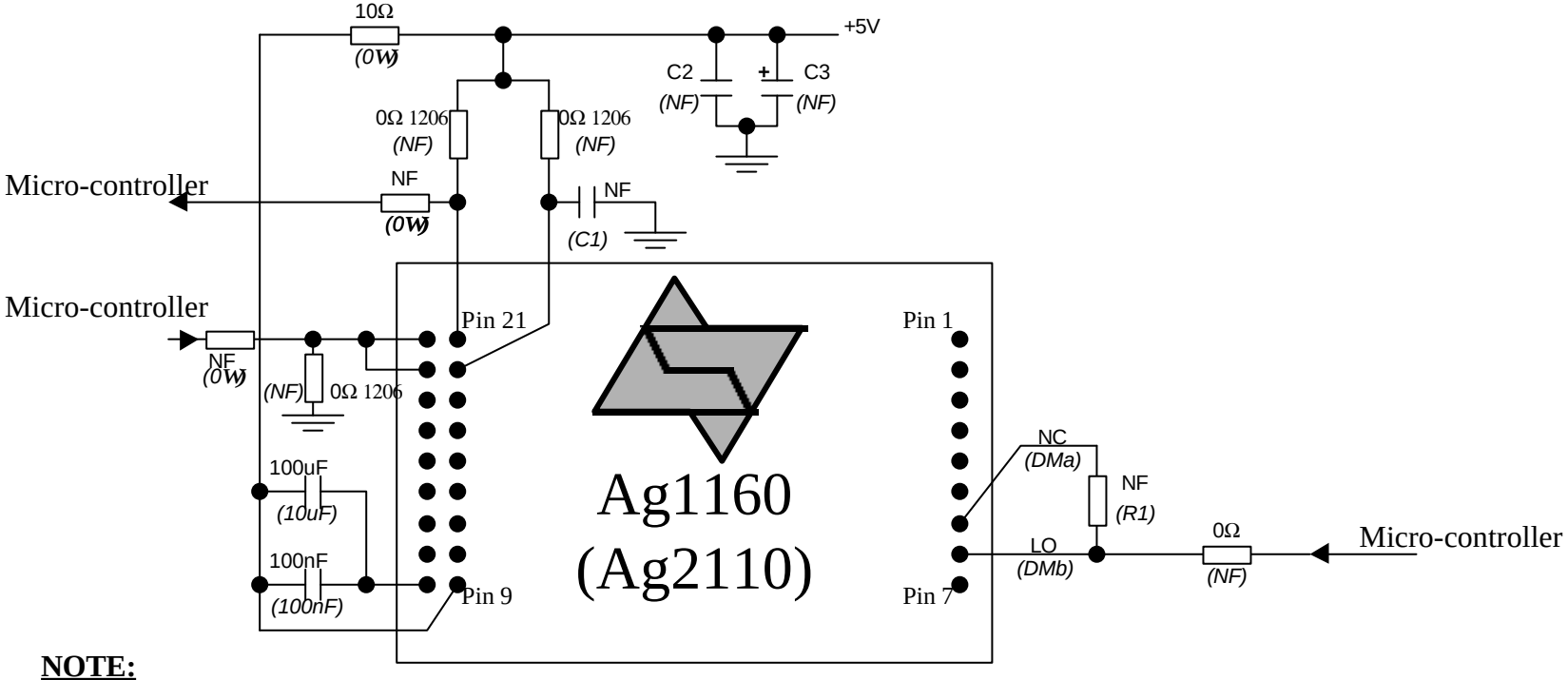

NOTE:

Components shown are for Ag1160. Components in brackets and italics are for Ag2110.

1206 sized components are needed for increased track width.

C1 = 100uF

C2 = 100nF

C3 = 220uF Rubycon ZL

R1 = DC Mask resistor (see Ag2110 datasheet)