Ag1160 Application

June 2001

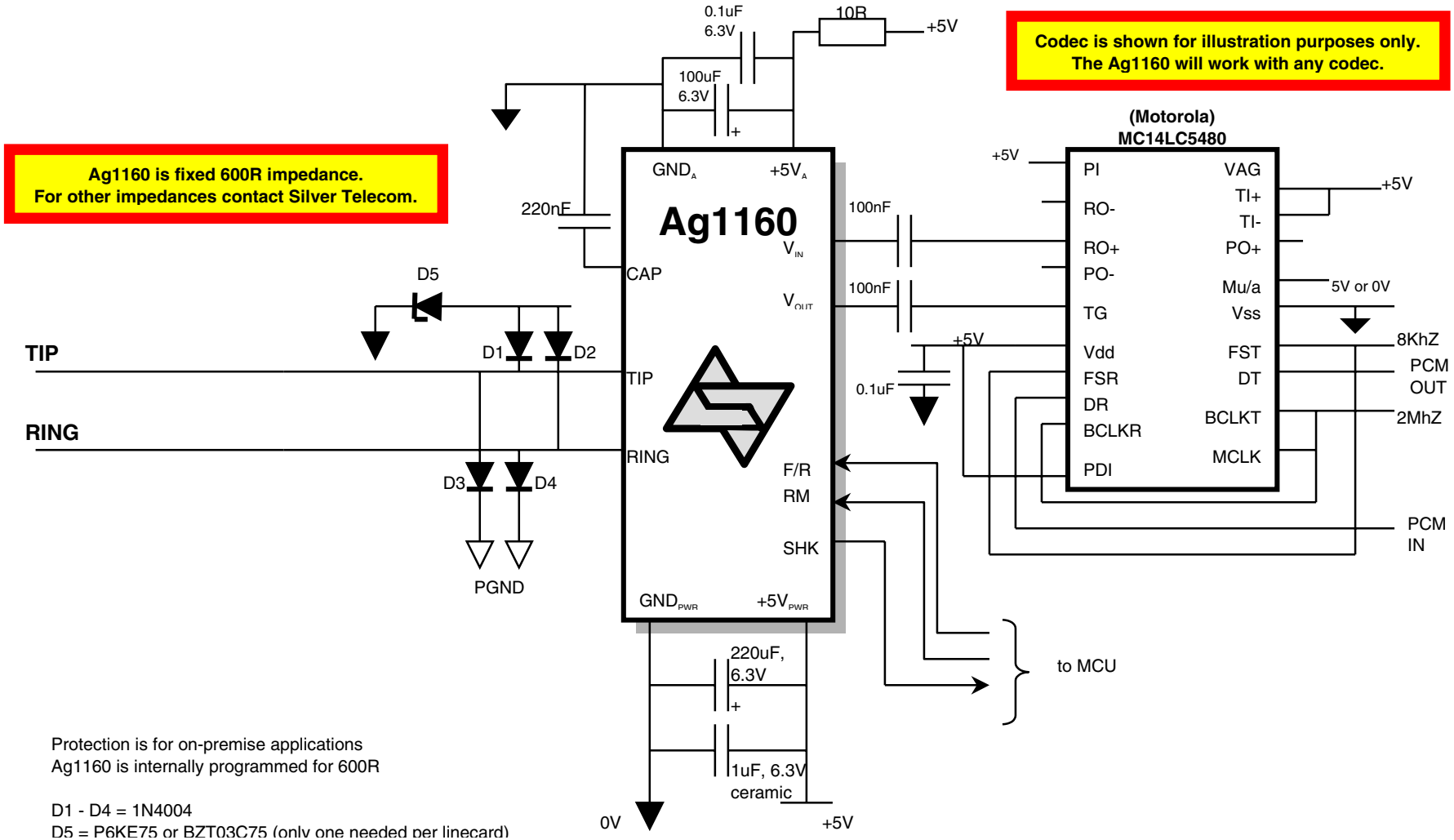

Protection is for on-premise applications
Ag1160 is internally programmed for 600R

D1 - D4 = 1N4004
D5 = P6KE75 or BZT03C75 (only one needed per linecard)

AN1160-4v1-0