Interfacing Ag1460 to Legerity T8533

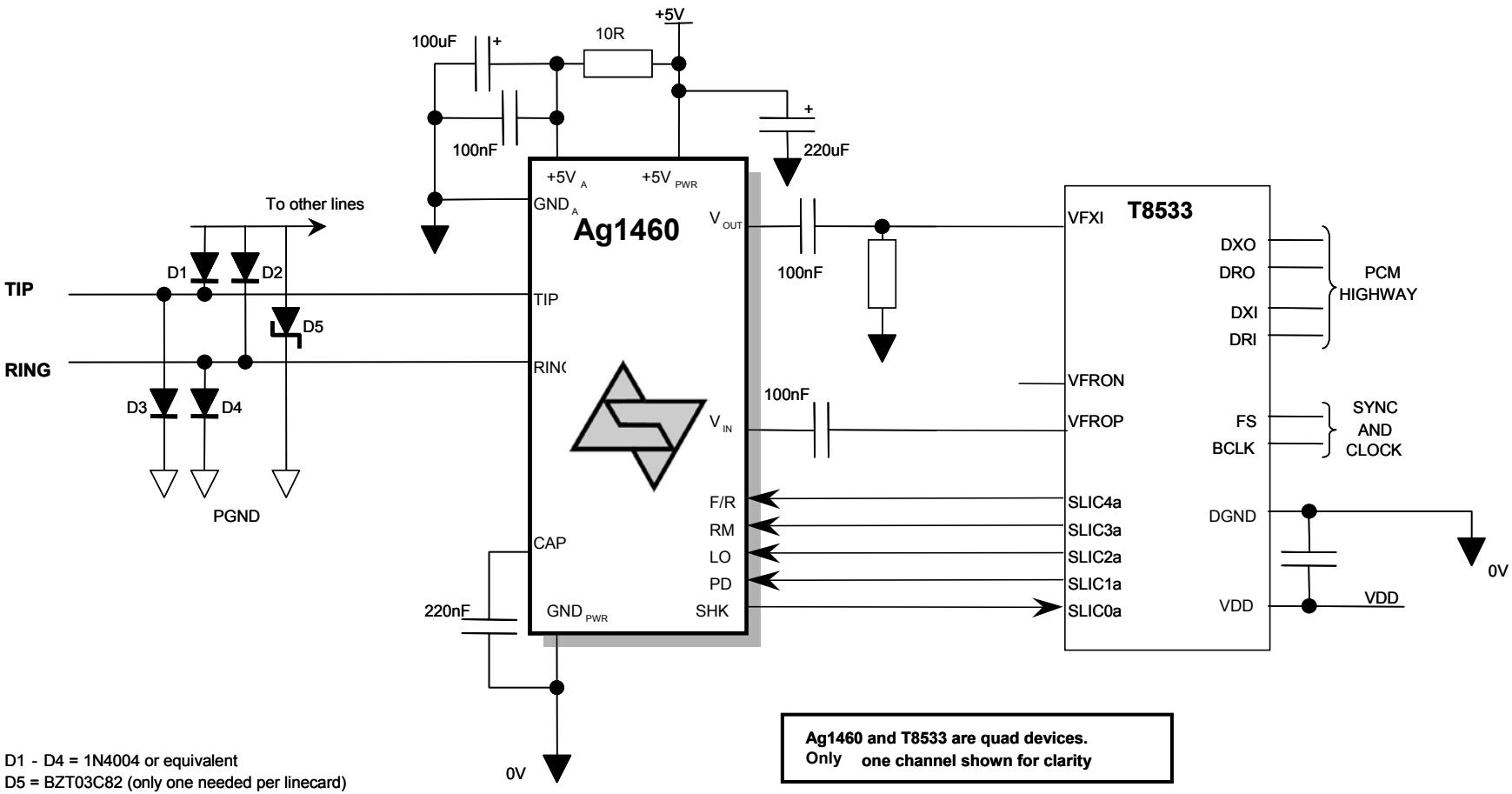

D1 - D4 = 1N4004 or equivalent
D5 = BZT03C82 (only one needed per linecard)
0V = +5V return